UA741

GENERAL PURPOSE SINGLE OPERATIONAL AMPLIFIER

- LARGE INPUT VOLTAGE RANGE
- NO LATCH-UP
- HIGH GAIN
- SHORT-CIRCUIT PROTECTION
- NO FREQUENCY COMPENSATION
- REQUIRED
- SAME PIN CONFIGURATION AS THE UA709

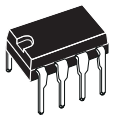

N
DIP8
(Plastic Package)

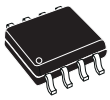

D
SO8
(Plastic Micropackage)

DESCRIPTION

The UA741 is a high performance monolithic operational amplifier constructed on a single silicon chip. It is intented for a wide range of analog applications.

- Summing amplifier
- Voltage follower
- Integrator
- Active filter
- Function generator

The high gain and wide range of operating voltages provide superior performances in integrator, summing amplifier and general feedback applications. The internal compensation network (6dB/octave) insures stability in closed loop circuits.

ORDER CODE

Part Number	Temperature Range	Package	
		N	D
UA741C	0°C, +70°C	•	•
UA741I	-40°C, +105°C	•	•
UA741M	-55°C, +125°C	•	•
Example : UA741CN			

N = Dual in Line Package (DIP)
D = Small Outline Package (SO) - also available in Tape & Reel (DT)

PIN CONNECTIONS (top view)

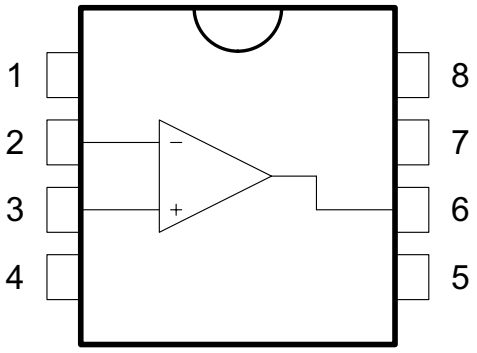

1 - Offset null 1
2 - Inverting input
3 - Non-inverting input
4 - V_{CC}^-
5 - Offset null 2
6 - Output
7 - V_{CC}^+
8 - N.C.

SCHEMATIC DIAGRAM

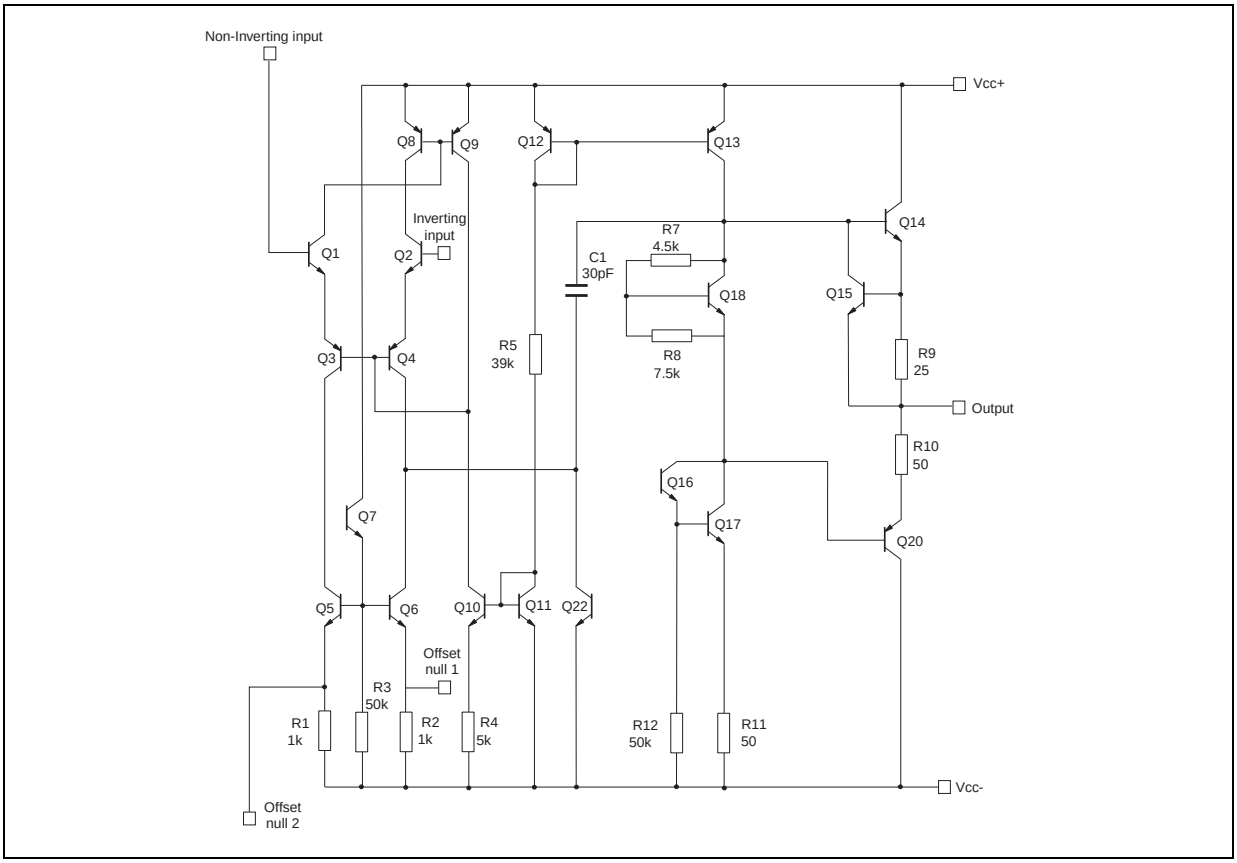

ABSOLUTE MAXIMUM RATINGS

Symbol	Parameter	UA741M	UA741I	UA741C	Unit
V_{CC}	Supply voltage	±22			V
V_{id}	Differential Input Voltage	±30			V
V_i	Input Voltage	±15			V
P_{tot}	Power Dissipation [1)]	500			mW
	Output Short-circuit Duration	Infinite			
T_{oper}	Operating Free-air Temperature Range	-55 to +125	-40 to +105	0 to +70	°C
T_{stg}	Storage Temperature Range	-65 to +150			°C

1. Power dissipation must be considered to ensure maximum junction temperature (Tj) is not exceeded.

ELECTRICAL CHARACTERISTICS

V_{CC} = ±15V, T_{amb} = +25°C (unless otherwise specified)

errori

dinamica

Symbol	Parameter	Min.	Typ.	Max.	Unit
V_{io}	Input Offset Voltage ($R_s \leq 10k\Omega$) T_{amb} = +25°C $T_{min} \leq T_{amb} \leq T_{max}$		1	5 6	mV
I_{io}	Input Offset Current T_{amb} = +25°C $T_{min} \leq T_{amb} \leq T_{max}$		2	30 70	nA
I_{ib}	Input Bias Current T_{amb} = +25°C $T_{min} \leq T_{amb} \leq T_{max}$		10	100 200	nA
A_{vd}	Large Signal Voltage Gain (V_o = ±10V, R_L = 2kΩ) T_{amb} = +25°C $T_{min} \leq T_{amb} \leq T_{max}$	50 25	200		V/mV
SVR	Supply Voltage Rejection Ratio ($R_s \leq 10k\Omega$) T_{amb} = +25°C $T_{min} \leq T_{amb} \leq T_{max}$	77 77	90		dB
I_{CC}	Supply Current, no load T_{amb} = +25°C $T_{min} \leq T_{amb} \leq T_{max}$		1.7	2.8 3.3	mA
V_{icm}	Input Common Mode Voltage Range T_{amb} = +25°C $T_{min} \leq T_{amb} \leq T_{max}$	±12 ±12			V
CMR	Common Mode Rejection Ratio ($R_S \leq 10k\Omega$) T_{amb} = +25°C $T_{min} \leq T_{amb} \leq T_{max}$	70 70	90		dB
I_{OS}	Output short Circuit Current	10	25	40	mA
$\pm V_{opp}$	Output Voltage Swing T_{amb} = +25°C R_L = 10kΩ R_L = 2kΩ $T_{min} \leq T_{amb} \leq T_{max}$ R_L = 10kΩ R_L = 2kΩ	12 10 12 10	14 13		V
SR	Slew Rate V_i = ±10V, R_L = 2kΩ, C_L = 100pF, unity Gain	0.25	0.5		V/µs
t_r	Rise Time V_i = ±20mV, R_L = 2kΩ, C_L = 100pF, unity Gain		0.3		µs
K_{ov}	Overshoot V_i = 20mV, R_L = 2kΩ, C_L = 100pF, unity Gain		5		%
R_i	Input Resistance	0.3	2		MΩ
GBP	Gain Bandwith Product V_i = 10mV, R_L = 2kΩ, C_L = 100pF, f =100kHz	0.7	1		MHz
THD	Total Harmonic Distortion f = 1kHz, A_v = 20dB, R_L = 2kΩ, V_o = $2V_{pp}$, C_L = 100pF, T_{amb} = +25°C		0.06		%
e_n	Equivalent Input Noise Voltage f = 1kHz, R_s = 100Ω		23		$\frac{nV}{\sqrt{Hz}}$
Øm	Phase Margin		50		Degrees